Rotary Series

1-1 Features of TBI MOTION Precision Rotary Ball Screw/Spline D02
1-2 Accuracy D05
1-2-1 RBBY, RBLY Accuracy Standards D05
1-2-2 RFBY Accuracy Standards D06
1-2-3 RSSY, RSLY Accuracy Standards D07
1-2-4 RFSY Accuracy Standards D07
1-2-5 RLBF, RLSF Accuracy Standards D08
1-3 Example of Assembly - RFBY D10
1-3-1 Example of Mounting Rotary Ball Screw Nut Model RFBY D10
1-4 Example of Assembly - RBBY D11
1-4-1 Example of Mounting Precision Ball Screw/Spline Model RBBY D11
1-5 Nominal Model Code of Rotary Series D12
1-6 Roary Series Weight List D26

ABOUT PRECISION ROTARY BALL

1-1 Features of *TBI MOTION* Precision Rotary Ball Screw/Spline

TBI MOTION rotary ball screw and spline is designed to move linearly and rotationally in one assembly, with symmetrical orientation design between the outer and inner ball screw or spline nut. Both rotary and spiral movement can be achieved simultaneously.

TBI MOTION rotary line is the most ideal key component in scara robots, industrial robots, pick & place, laser engraving, transporting and many other multi-directional application.

Feature

Zero clearance/High rigidity

TBI MOTION rotary series featured 40° angular (Back to back) contact angle within in the bearing. It enables self-aligning with minor mounting error and bears higher axial load to achieve better accuracy. Custom preload can be applied to reduce clearance and increase high rigidity. (as shown in Fig 1.1.1)

High speed/Smooth running performance

The rotary series uses ***TBI MOTION*** high lead screw to maintain high speed and smoothness during operating.

Noise reduction

The precision ground screw thread and spline groove make sure the ball bearing travel fluently during operations which reduce the skidding, friction and noise level and thus improve the service performance and life.

Easy-Assembly/Compactness

TBI MOTION rotary line features a one-piece compact and easy mounting design.

Accuracy

Please refer to chart D05~09 for detail.

Spline alternative

TBI MOTION offers customized end for ball spline. Hollow spline is also available for special operation requirement such as pipe or wire-arrangement, evacuating and light weight.

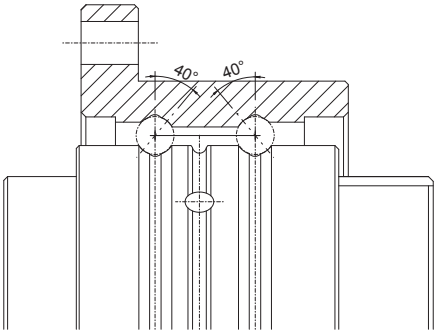

Fig 1.1.1 DB-type (Back to back)

Table 1.1.1 Mass series

Rotary Ball Screw - RFBY Type	Rotary Ball Spline - RLBF Type
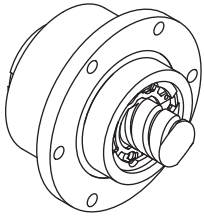	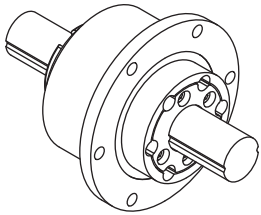
Ball Screw/Spline - RBBY Type	**Ball Screw/Spline - RBLY Type**
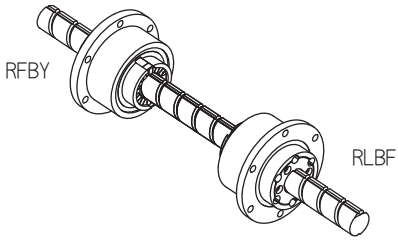	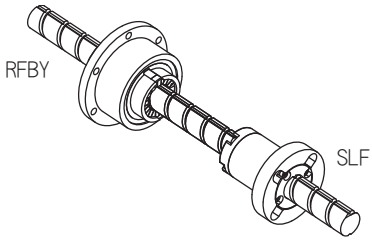

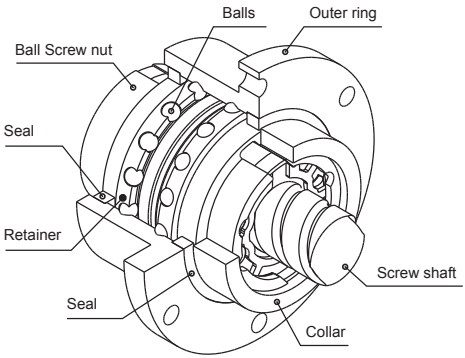

Fig 1.1.2 The Structure of RFBY - series

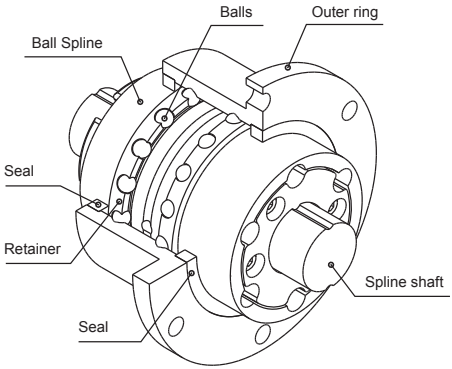

Fig 1.1.3 The Structure of RLBF - series

1-1 Features of *TBI MOTION* Precision Rotary Ball Screw/Spline

Table 1.1.2 Compact series

Rotary Ball Screw - RFSY Type	Rotary Ball Spline - RLSF Type
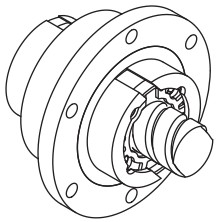	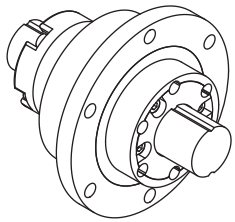
Ball Screw/Spline - RSSY Type	**Ball Screw/Spline - RSLY Type**
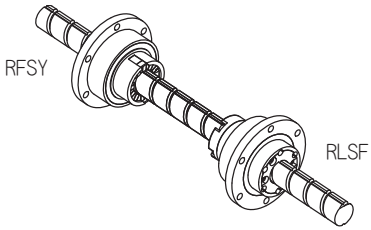	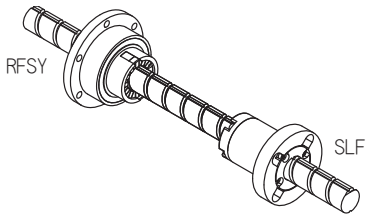

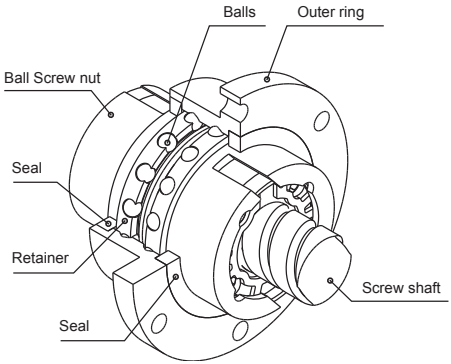

Fig 1.1.4 The Structure of RFSY - series

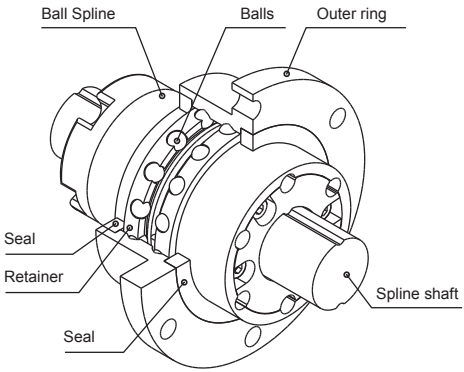

Fig 1.1.5 The Structure of RLSF - series

1-2 Accuracy

■ 1-2-1 RBBY, RBLY Accuracy Standards

The Ball Screw/Spline is manufactured as the following specifications.

【Ball Screw】

Axial clearance : 0 or less
Lead accuracy : C5
(Refer to C06 for more details)

【Ball Spline】

Clearance in the rotational direction : 0 or less
(P1 : light preload)
(Refer to B20-21 for more details)
Accuracy grade : class H
(Refer to B22 for more details)

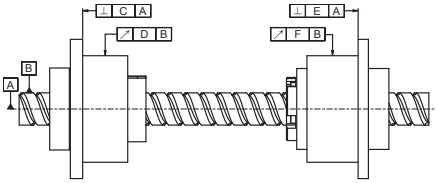

RFBY
Rotary Ball screw nut

RLBF
Rotary Ball Spline nut

Fig 1.2.1 RBBY - series

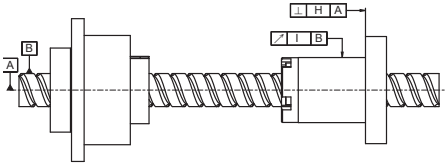

RFBY
Rotary Ball screw nut

SLF
Ball Spline nut

Fig 1.2.2 RBLY - series

Model No.	C	D	E	F	H	I
RBBY01616 RBLY01616	0.018	0.021	0.016	0.020	0.013	0.016
RBBY02020 RBLY02020	0.018	0.021	0.016	0.020	0.013	0.016
RBBY02525 RBLY02525	0.021	0.021	0.018	0.024	0.016	0.016
RBBY03232 RBLY03232	0.021	0.021	0.018	0.024	0.016	0.016
RBBY04040 RBLY04040	0.025	0.025	0.021	0.033	0.019	0.019
RBBY05050 RBLY05050	0.025	0.025	0.021	0.033	0.019	0.019

1-2 Accuracy

■ 1-2-2 RFBY Accuracy Standards

The accuracy of model RFBY is according to JIS standard (JIS B 1192-1997) except for the circular runout of Ball Screw axis(D) and the perpendicularity of the flange-mounting surface against the screw axis (C).

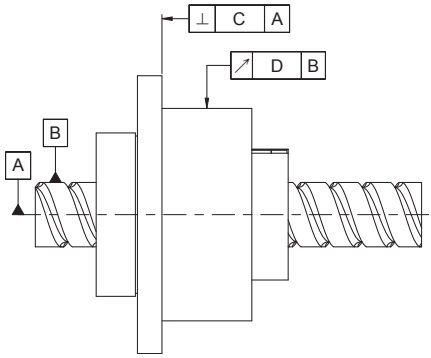

Fig 1.2.3 RFBY - series

Unit : mm

Lead angle accuracy	Rolled C7		Rolled C10		Ground C7		Ground C5		Ground C3	
Model No.	C	D	C	D	C	D	C	D	C	D
RFBY01616	0.035	0.065	0.035	0.065	0.023	0.035	0.016	0.020	0.013	0.017
RFBY02020	0.035	0.065	0.035	0.065	0.023	0.035	0.016	0.020	0.013	0.017
RFBY02525	0.035	0.065	0.035	0.065	0.023	0.035	0.018	0.024	0.015	0.020
RFBY03232	0.035	0.065	0.035	0.065	0.023	0.035	0.018	0.024	0.015	0.020
RFBY04040	0.046	0.086	0.046	0.086	0.026	0.046	0.021	0.033	0.018	0.026
RFBY05050	0.046	0.086	0.046	0.086	0.026	0.046	0.021	0.033	0.018	0.026

■ 1-2-3 RSSY, RSLY Accuracy Standards

The Ball Screw/Spline is manufactured as the following specifications.

【Ball Screw】

Axial clearance : 0 or less
Lead accuracy : C5
(Refer to C06 for more details)

【Ball Spline】

Clearance in the rotational direction : 0 or less
(P1 : light preload)
(Refer to B20-21 for more details)
Accuracy grade : class H
(Refer to B22 for more details)

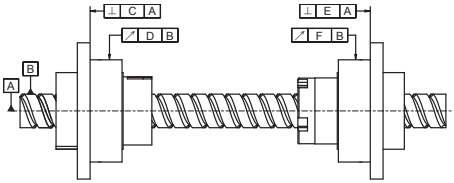

RFSY
Rotary Ball screw nut

RLSF
Rotary Ball Spline nut

Fig 1.2.4 RSSY - series

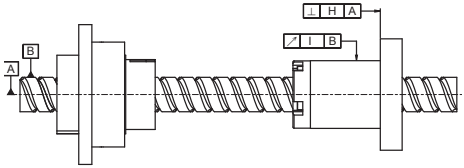

RFSY
Rotary Ball screw nut

SLF
Ball Spline nut

Fig 1.2.5 RSLY - series

Model No.	C	D	E	F	H	I
RSSY01616 RSLY01616	0.018	0.021	0.016	0.020	0.013	0.016
RSSY02020 RSLY02020	0.018	0.021	0.016	0.020	0.013	0.016
RSSY02525 RSLY02525	0.021	0.021	0.018	0.024	0.016	0.016
RSSY03232 RSLY03232	0.021	0.021	0.018	0.024	0.016	0.016
RSSY04040 RSLY04040	0.025	0.025	0.021	0.033	0.019	0.019

■ 1-2-4 RFSY Accuracy Standards

The accuracy of model RFBY is according to JIS standard (JIS B 1192-1997) except for the circular runout of Ball Screw axis(D) and the perpendicularity of the flange-mounting surface against the screw axis (C).

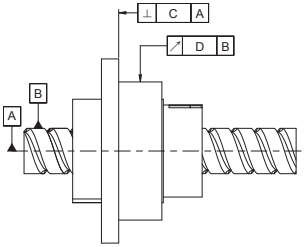

Fig 1.2.3 RFBY - series

1-2 Accuracy

Unit : mm

Lead angle accuracy	Rolled C7		Rolled C10		Ground C7		Ground C5		Ground C3	
Model No.	C	D	C	D	C	D	C	D	C	D
RFSY01616	0.035	0.065	0.035	0.065	0.023	0.035	0.016	0.020	0.013	0.017
RFSY02020	0.035	0.065	0.035	0.065	0.023	0.035	0.016	0.020	0.013	0.017
RFSY02525	0.035	0.065	0.035	0.065	0.023	0.035	0.018	0.024	0.015	0.020
RFSY03232	0.035	0.065	0.035	0.065	0.023	0.035	0.018	0.024	0.015	0.020
RFSY04040	0.046	0.086	0.046	0.086	0.026	0.046	0.021	0.033	0.018	0.026

■ 1-2-5 RLBF, RLSF Accuracy Standards

Accuracy Grades

The accuracy of the Ball Spline is determined by the nodding action of the spline-nut and classified into three accuracy class : Normal(N), High(H) and Precision(P).

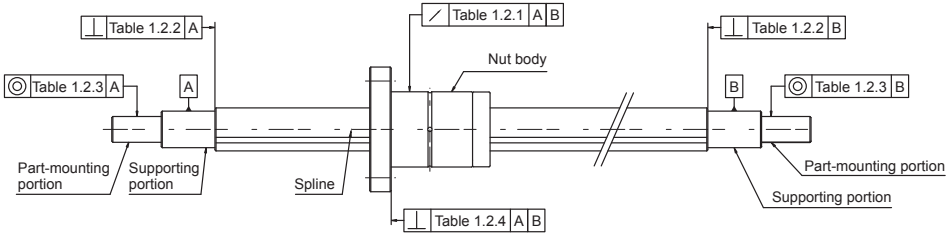

Fig 1.2.7

Accuracy Specification

Tables 1.2.1 ~ 5 indicate the the measurement items of Ball Spline.

Table1.2.1 The Maximum nodding action of Spline Nut on the support unit. Unit : μm

Length \ Nominal Diameter		16, 20			25, 32			40, 50		
Above	Below	N	H	P	N	H	P	N	H	P
-	200	56	34	18	53	32	18	53	32	16
200	315	71	45	25	58	39	21	58	36	19
315	400	83	53	31	70	44	25	63	39	21
400	500	95	62	38	78	50	29	68	43	24
500	630	112	-	-	88	57	34	74	47	27
630	800	-	-	-	103	68	42	84	54	32

Table1.2.2 The Maximum perpendicularity of Spline-shaft end on the support unit. Unit : μm

Nominal Diameter \ Accuracy		Normal (N)	High (H)	Precision (P)
16	20	27	11	8
25	32	33	13	9
40	50	39	16	11

Table1.2.3 The concentricity between components assembly part and attach surface. Unit : μm

Nominal Diameter \ Accuracy		Normal (N)	High (H)	Precision (P)
16	20	46	19	12
25	32	53	22	13
40	50	62	25	15

Table1.2.4 The perpendicularity of flange on the attach surface Unit : μm

Nominal Diameter \ Accuracy				Normal (N)	High (H)	Precision (P)
16	20	25	32	30	16	11
40		50		46	19	13

Table1.2.5 The accuracy grade on the effective length accuracy Unit : μm

Accuracy	Normal (N)	High (H)	Precision (P)
Permissible Value	33	13	6

Note : Measurement only applies to any 100mm on the Spline shaft.

1-3 Example of Assembly - RFBY

■ 1-3-1 Example of Mounting Rotary Ball Screw Nut Model RFBY

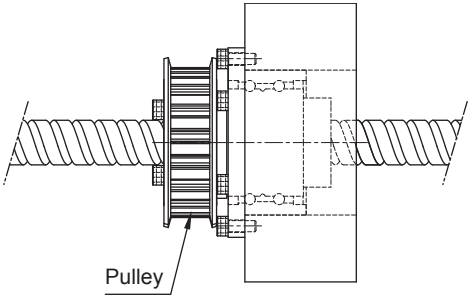

Fig 1.3.1

Example of Mounting Model RFBY

(1) Ball screw nut fixed, screw shaft floated. (Suitable for a long table)

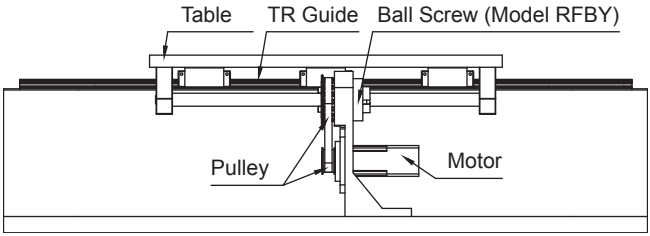

Fig 1.3.2

(2) Ball screw nut floated, screw shaft fixed. (Suitable for a short table and a long stroke)

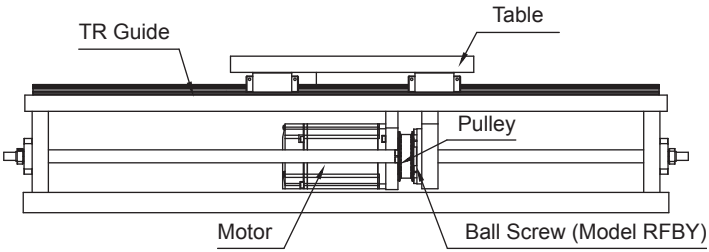

Fig 1.3.3

1-4 Example of Assembly - RBBY

■ 1-4-1 Example of Mounting Precision Ball Screw/Spline Model RBBY

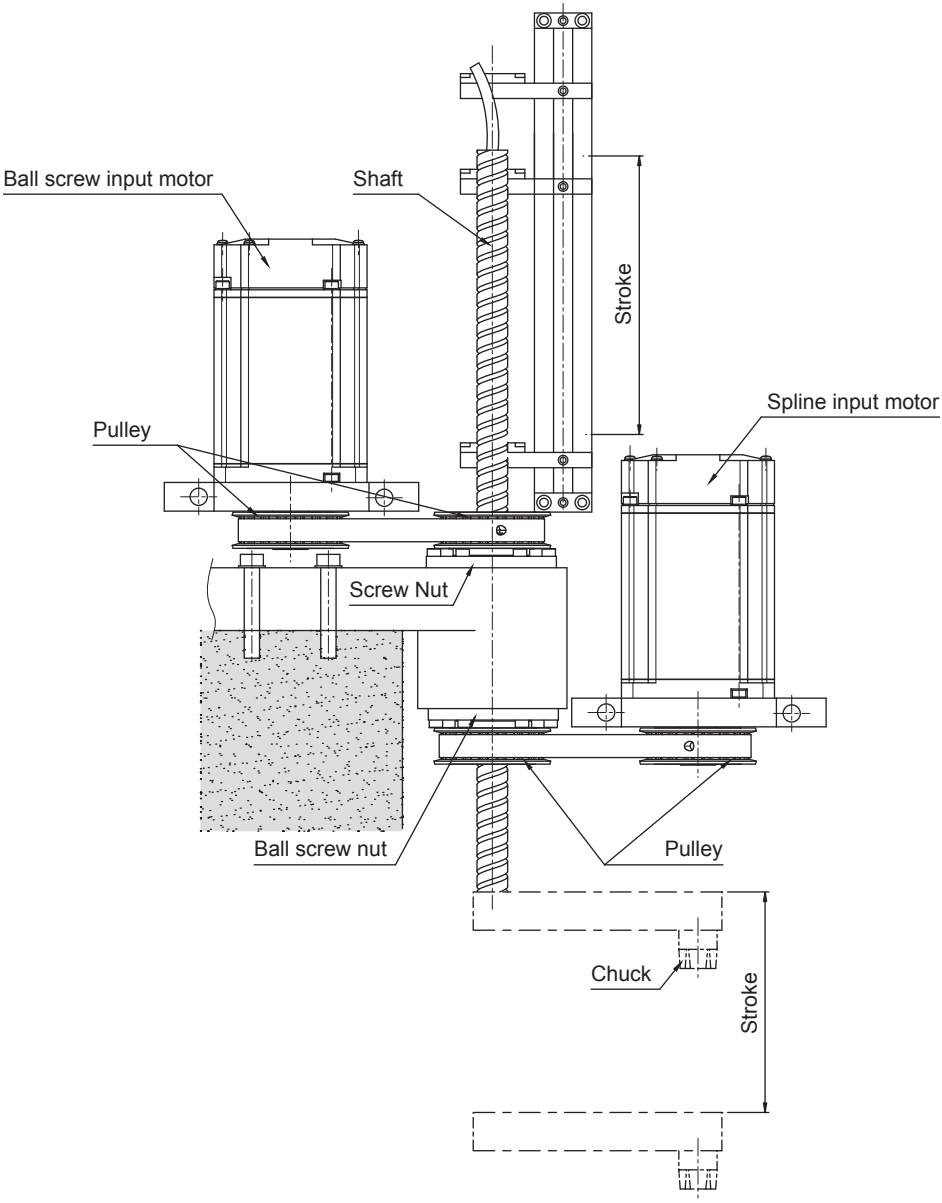

Fig 1.4.1

1-5 Nominal Model Code of Rotary Series

Nominal Model Code of Rotary Ball Screw

RFSY	R	016	16	A2	N	G	C5	-	500	-	P0	(2A)
①	②	③	④	⑤	⑥	⑦	⑧		⑨		⑩	⑪

① Nominal Model	② Threading Direction	③ Nominal Diameter	④ Lead
RFSY	R : Right	Unit : mm	Unit : mm
RFBY			

⑤ Number of Turns (Turn·Row)	⑥ Flange Type	⑦ Product Code	⑧ Accuracy Grade
Turn : A : 1.8	N : Round	G : Ground	C0, C1, C2, C3, C5, C7, C10
ex : (1.8×2 = A2)		F : Rolled	

⑨ Overall Length of Shaft	⑩ Axial Clearance and Preload Value	⑪ Number of Grooves
Unit : mm	P0, P1, P2, P3, P4	1A : Single start screw
		2A : Doube start screw

Nominal Model Code of Rotary Ball Spline

RLSF	016	T2	N	N	H	-	500	-	P0
①	②	③	④	⑤	⑥		⑦		⑧

① Nominal Model	② Nominal Diameter	③ Groove
RLSF	Unit : mm	T2 : 2 Rows
RLBF		T4 : 4 Rows

④ Flange Type	⑤ Accuracy Grade of Spline Shaft	⑥ Spline Shaft Type
N : Round	N : Normal	S : Solid
	H : High	H : Hollow
	P : Precision	

⑦ Overall Length of Shaft	⑧ Preload Value
Unit : mm	P0 : No preload
	P1 : Light preload
	P2 : Medium preload

Nominal Model Code of Rotary Ball Screw and Ball Spline

RSSY	R	016	16	A1	G	C5	H	H	-	500	-	P1	(1A)
①	②	③	④	⑤	⑥	⑦	⑧	⑨		⑩		⑪	⑫

①

Nominal Model
RSSY (RFSY+RLSF)
RSLY (RFSY+SLF)
RBBY (RFBY+RLBF)
RBLY (RFBY+SLF)

②

Threading Direction
R : Right

③

Nominal Diameter
Unit : mm

④

Lead
Unit : mm

⑤

Number of Turns (Turn·Row)
Turn : A : 1.8
ex : (1.8×1 = A1)

⑥

Product Code
G : Ground

⑦

Accuracy Grade of Ball Screw
C5

⑧

Accuracy Grade of Spline Shaft
H : High

⑨

Spline Shaft Type
S : Solid
H : Hollow

⑩

Overall Length of Assembly
Unit : mm

⑪

Preload Value
P1 : Light preload

⑫

Number of Grooves
1A : Single start screw

1-5 Nominal Model Code of Rotary Series

RFBY Series Specifications

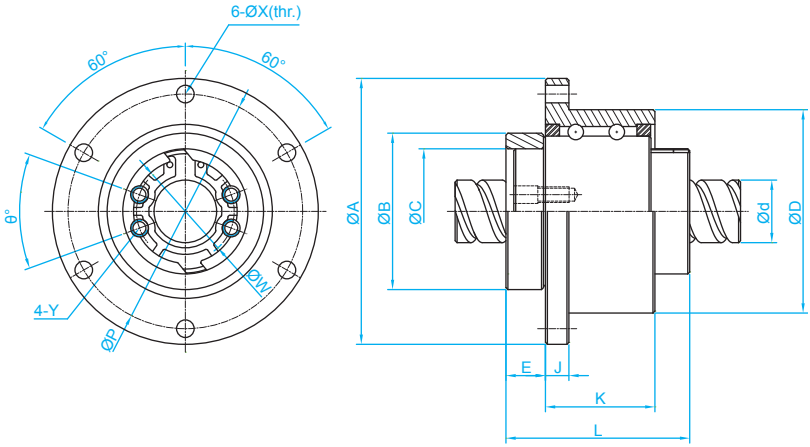

Unit : mm

Model No.	d	l	Da	n	Support Bearing Load Rating		Ball Screw Nut Dimension													Screw Nut Load Rating	
					Ca (kgf)	Coa (kgf)	D	A	B	L	C	E	J	K	P	X	W	Y	θ	Ca (kgf)	Coa (kgf)
RFBY01616-1.8	16	16	2.778	1.8x1	750	1593	$52^{0}_{-0.007}$	68	$40^{0}_{-0.025}$	47	$32^{+0.025}_{0}$	10.1	6	28	60	4.5	25	M4	40	591	1275
RFBY01616-3.6	16	16	2.778	1.8x2	750	1593	$52^{0}_{-0.007}$	68	$40^{0}_{-0.025}$	47	$32^{+0.025}_{0}$	10.1	6	28	60	4.5	25	M4	40	1073	2551
RFBY02020-1.8	20	20	3.175	1.8x1	1066	2452	$62^{0}_{-0.007}$	78	$50^{0}_{-0.025}$	53.5	$39^{+0.025}_{0}$	11	7	34.5	70	4.5	31	M5	40	764	1758
RFBY02020-3.6	20	20	3.175	1.8x2	1066	2452	$62^{0}_{-0.007}$	78	$50^{0}_{-0.025}$	53.5	$39^{+0.025}_{0}$	11	7	34.5	70	4.5	31	M5	40	1387	3515
RFBY02525-1.8	25	25	3.969	1.8x1	1119	2765	$72^{0}_{-0.007}$	92	$58^{0}_{-0.03}$	65	$47^{+0.025}_{0}$	15.8	8	35	81	5.5	38	M6	40	1142	2747
RFBY02525-3.6	25	25	3.969	1.8x2	1119	2765	$72^{0}_{-0.007}$	92	$58^{0}_{-0.03}$	65	$47^{+0.025}_{0}$	15.8	8	35	81	5.5	38	M6	40	2074	5494
RFBY03232-1.8◆	32	32	4.762	1.8x1	2087	5586	$80^{0}_{-0.007}$	105	$66^{0}_{-0.03}$	81	$58^{+0.03}_{0}$	21.5	9	42.5	91	6.6	48	M6	40	1664	4345
RFBY04040-1.8◆	40	40	6.35	1.8x1	3183	9306	$110^{0}_{-0.008}$	140	$90^{0}_{-0.035}$	102	$73^{+0.03}_{0}$	16.5	11	64.5	123	9	61	M8	50	2662	7031
RFBY05050-1.8◆	50	50	7.938	1.8x1	4328	12573	$120^{0}_{-0.008}$	156	$100^{0}_{-0.035}$	121	$90^{+0.035}_{0}$	29	12	70	136	11	75	M10	50	3978	10987

※Items labeled with ◆ are customized products. For these product orders, please contact TBI in advance.

RLBF Series Specifications

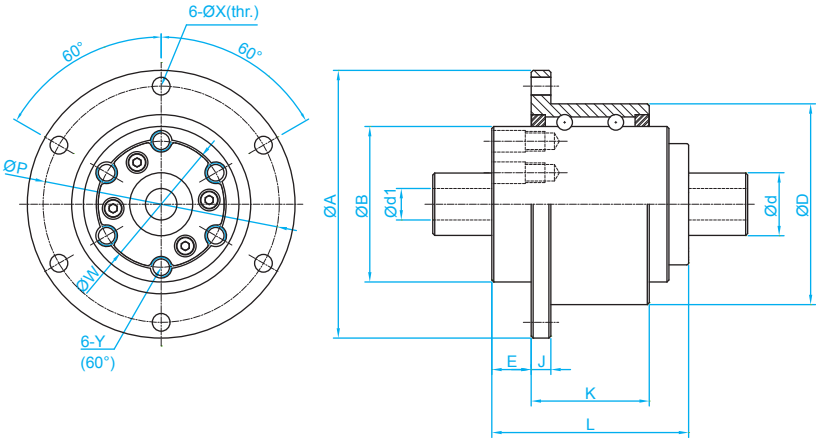

Unit : mm

Model No.	d	d1	Row	Support Bearing Load Rating		Spline Nut Dimension											Ball Spline Load Rating	
				Ca (kgf)	Coa (kgf)	D	A	B	L	E	J	K	P	X	W	Y	Ca (kgf)	Coa (kgf)
RLBF016	16	8	2	746	1597	$52^{0}_{-0.007}$	68	$39.5^{0}_{-0.025}$	50	10	5	30	60	4.5	32	M5	545	849
RLBF020	20	10	2	1011	2138	$56^{0}_{-0.007}$	72	$43.5^{0}_{-0.025}$	63	12	6	42	64	4.5	36	M5	736	1124
RLBF025	25	15	4	1558	4616	$62^{0}_{-0.007}$	78	$53^{0}_{-0.03}$	71	13	6	49	70	4.5	45	M6	1003	1593
RLBF032	32	16	4	2087	5586	$80^{0}_{-0.007}$	105	$65.5^{0}_{-0.03}$	80	17	9	54	91	6.6	55	M6	1324	2251
RLBF040	40	20	4	3141	8705	$100^{0}_{-0.008}$	130	$79.5^{0}_{-0.03}$	100	23	11	63	113	9	68	M6	2972	4033
RLBF050	50	26	4	4317	12585	$120^{0}_{-0.008}$	156	$99.5^{0}_{-0.035}$	125	25	12	87	136	11	85	M10	4086	5615

1-5 Nominal Model Code of Rotary Series

RBBY Series Specifications

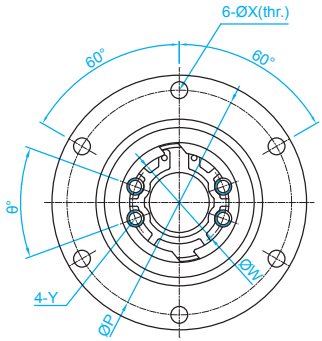

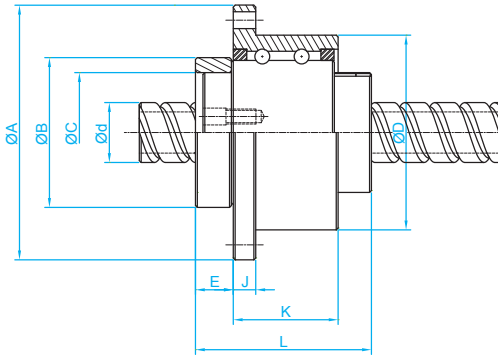

RFBY

Unit : mm

Model No.	d	l	Da	n	Support Bearing Load Rating		Ball Screw Nut Dimension													Screw Nut Load Rating	
					Ca (kgf)	Coa (kgf)	D	A	B	L	C	E	J	K	P	X	W	Y	θ	Ca (kgf)	Coa (kgf)
RBBY01616-1.8	16	16	2.778	1.8x1	750	1593	$52^{0}_{-0.007}$	68	$40^{0}_{-0.025}$	47	$32^{+0.025}_{0}$	10.1	6	28	60	4.5	25	M4	40	591	1275
RBBY02020-1.8	20	20	3.175	1.8x1	1066	2452	$62^{0}_{-0.007}$	78	$50^{0}_{-0.025}$	53.5	$39^{+0.025}_{0}$	11	7	34.5	70	4.5	31	M5	40	764	1758
RBBY02525-1.8	25	25	3.969	1.8x1	1119	2765	$72^{0}_{-0.007}$	92	$58^{0}_{-0.03}$	65	$47^{+0.025}_{0}$	15.8	8	35	81	5.5	38	M6	40	1142	2747
RBBY03232-1.8◆	32	32	4.762	1.8x1	2087	5586	$80^{0}_{-0.007}$	105	$66^{0}_{-0.03}$	81	$58^{+0.03}_{0}$	21.5	9	42.5	91	6.6	48	M6	40	1664	4345
RBBY04040-1.8◆	40	40	6.35	1.8x1	3183	9306	$110^{0}_{-0.008}$	140	$90^{0}_{-0.035}$	102	$73^{+0.03}_{0}$	16.5	11	64.5	123	9	61	M8	50	2662	7031
RBBY05050-1.8◆	50	50	7.938	1.8x1	4328	12573	$120^{0}_{-0.008}$	156	$100^{0}_{-0.035}$	121	$90^{+0.035}_{0}$	29	12	70	136	11	75	M10	50	3978	10987

※Items labeled with ◆ are customized products. For these product orders, please contact TBI in advance.

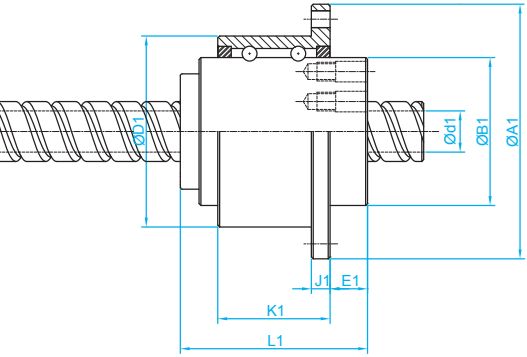

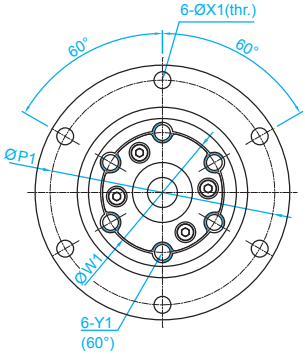

RLBF

Unit : mm

Model No.	d	d1	Row	Support Bearing Load Rating		Spline Nut Dimension											Ball Spline Load Rating	
				Ca (kgf)	Coa (kgf)	D1	A1	B1	L1	E1	J1	K1	P1	X1	W1	Y1	Ca (kgf)	Coa (kgf)
RBBY01616	16	11	2	746	1597	$52^{0}_{-0.007}$	68	$39.5^{0}_{-0.025}$	50	10	5	30	60	4.5	32	M5	545	849
RBBY02020	20	14	2	1011	2138	$56^{0}_{-0.007}$	72	$43.5^{0}_{-0.025}$	63	12	6	42	64	4.5	36	M5	736	1124
RBBY02525	25	18	4	1558	4616	$62^{0}_{-0.007}$	78	$53^{0}_{-0.03}$	71	13	6	49	70	4.5	45	M6	1003	1593
RBBY03232	32	23	4	2087	5586	$80^{0}_{-0.007}$	105	$65.5^{0}_{-0.03}$	80	17	9	54	91	6.6	55	M6	1324	2251
RBBY04040	40	29	4	3141	8705	$100^{0}_{-0.008}$	130	$79.5^{0}_{-0.03}$	100	23	11	63	113	9	68	M6	2972	4033
RBBY05050	50	36	4	4317	12585	$120^{0}_{-0.008}$	156	$99.5^{0}_{-0.035}$	125	25	12	87	136	11	85	M10	4086	5615

1-5 Nominal Model Code of Rotary Series

RBLY Series Specifications

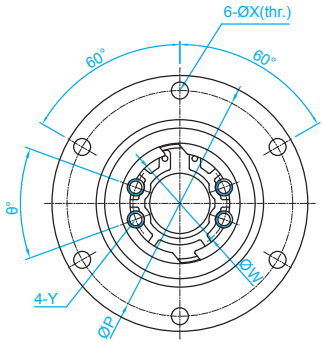

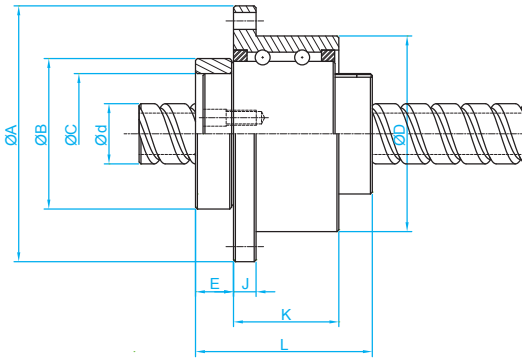

RFBY

Unit : mm

Model No.	d	l	Da	n	Support Bearing Load Rating		Ball Screw Nut Dimension													Screw Nut Load Rating	
					Ca (kgf)	Coa (kgf)	D	A	B	L	C	E	J	K	P	X	W	Y	θ	Ca (kgf)	Coa (kgf)
RBLY01616-1.8	16	16	2.778	1.8x1	750	1593	$52^{0}_{-0.007}$	68	$40^{0}_{-0.025}$	47	$32^{+0.025}_{0}$	10.1	6	28	60	4.5	25	M4	40	591	1275
RBLY02020-1.8	20	20	3.175	1.8x1	1066	2452	$62^{0}_{-0.007}$	78	$50^{0}_{-0.025}$	53.5	$39^{+0.025}_{0}$	11	7	34.5	70	4.5	31	M5	40	764	1758
RBLY02525-1.8	25	25	3.969	1.8x1	1119	2765	$72^{0}_{-0.007}$	92	$58^{0}_{-0.03}$	65	$47^{+0.025}_{0}$	15.8	8	35	81	5.5	38	M6	40	1142	2747
RBLY03232-1.8◆	32	32	4.762	1.8x1	2087	5586	$80^{0}_{-0.007}$	105	$66^{0}_{-0.03}$	81	$58^{+0.03}_{0}$	21.5	9	42.5	91	6.6	48	M6	40	1664	4345
RBLY04040-1.8◆	40	40	6.35	1.8x1	3183	9306	$110^{0}_{-0.008}$	140	$90^{0}_{-0.035}$	102	$73^{+0.03}_{0}$	16.5	11	64.5	123	9	61	M8	50	2662	7031
RBLY05050-1.8◆	50	50	7.938	1.8x1	4328	12573	$120^{0}_{-0.008}$	156	$100^{0}_{-0.035}$	121	$90^{+0.035}_{0}$	29	12	70	136	11	75	M10	50	3978	10987

※Items labeled with ◆ are customized products. For these product orders, please contact TBI in advance.

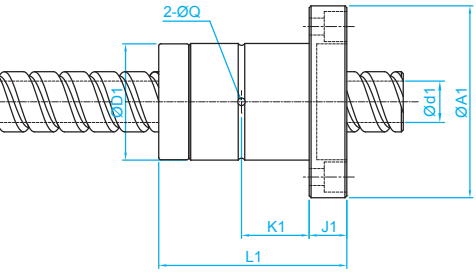

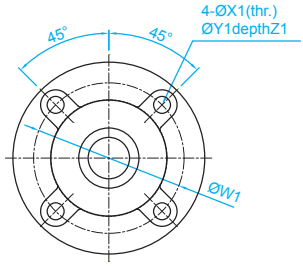

SLF

Unit : mm

Model No.	d	d1	Row	Spline Nut Dimension										Ball Spline Load Rating	
				D1	A1	L1	J1	K1	W1	X1	Y1	Z1	Q	Ca (kgf)	Coa (kgf)
RBLY01616	16	11	2	$31^{0}_{-0.016}$	51	50	10	18	40	4.5	8	6	2	545	849
RBLY02020	20	14	2	$35^{0}_{-0.016}$	58	56	10	18	45	5.5	9.5	5.4	2	724	1109
RBLY02525	25	18	4	$42^{0}_{-0.016}$	65	71	13	26.5	52	5.5	9.5	8	3	1003	1593
RBLY03232	32	23	4	$49^{0}_{-0.016}$	77	80	13	30	62	6.6	11	6.5	3	1324	2251
RBLY04040	40	29	4	$64^{0}_{-0.019}$	100	100	18	36	82	9	14	12	4	2972	4033
RBLY05050	50	36	4	$80^{0}_{-0.019}$	124	125	20	46.5	102	11	17.5	12	4	4086	5615

1-5 Nominal Model Code of Rotary Series

RFSY Series Specifications

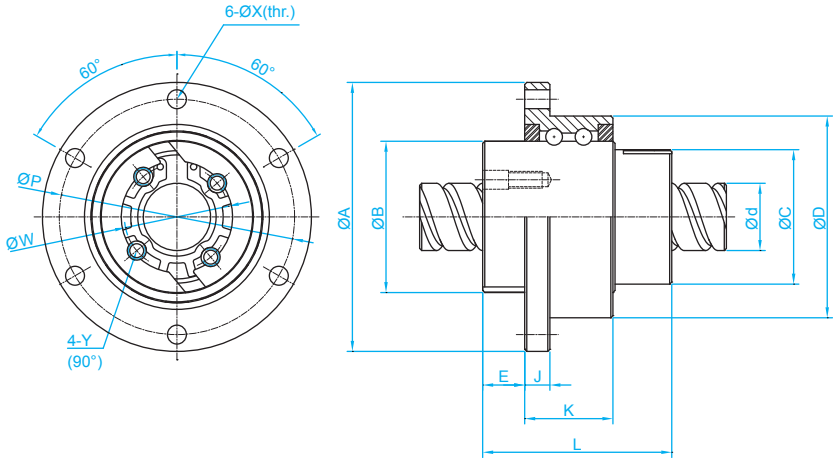

Unit : mm

Model No.	d	l	Da	n	Support Bearing Load Rating		Ball Screw Nut Dimension												Screw Nut Load Rating	
					Ca (kgf)	Coa (kgf)	D	A	B	L	C	E	J	K	P	X	W	Y	Ca (kgf)	Coa (kgf)
RFSY01616-1.8	16	16	2.778	1.8x1	730	1484	$48^{-0.009}_{-0.025}$	64	$36^{0}_{-0.025}$	45	32	10	6	21	56	4.5	25	M4	591	1275
RFSY01616-3.6	16	16	2.778	1.8x2	730	1484	$48^{-0.009}_{-0.025}$	64	$36^{0}_{-0.025}$	45	32	10	6	21	56	4.5	25	M4	1073	2551
RFSY02020-1.8	20	20	3.175	1.8x1	788	1811	$56^{0.01}_{-0.029}$	72	$43.5^{0}_{-0.025}$	52	39	11	6	21	64	4.5	31	M5	764	1758
RFSY02020-3.6	20	20	3.175	1.8x2	788	1811	$56^{0.01}_{-0.029}$	72	$43.5^{0}_{-0.025}$	52	39	11	6	21	64	4.5	31	M5	1387	3515
RFSY02525-1.8	25	25	3.969	1.8x1	1094	2607	$66^{0.01}_{-0.029}$	86	$52^{0}_{-0.03}$	64	47	13	7	25	75	5.5	38	M6	1142	2747
RFSY02525-3.6	25	25	3.969	1.8x2	1094	2607	$66^{0.01}_{-0.029}$	86	$52^{0}_{-0.03}$	64	47	13	7	25	75	5.5	38	M6	2074	5494
RFSY03232-1.8◆	32	32	4.762	1.8x1	1191	3233	$78^{0.01}_{-0.029}$	103	$63^{0}_{-0.03}$	78	58	14	8	25	89	6.6	48	M6	1664	4345
RFSY04040-1.8◆	40	40	6.35	1.8x1	2216	6685	$100^{0.012}_{-0.034}$	130	$79.5^{0}_{-0.035}$	99	73	16.5	10	33	113	9	61	M8	2662	7031

※Items labeled with ◆ are customized products. For these product orders, please contact TBI in advance.

RLSF Series Specifications

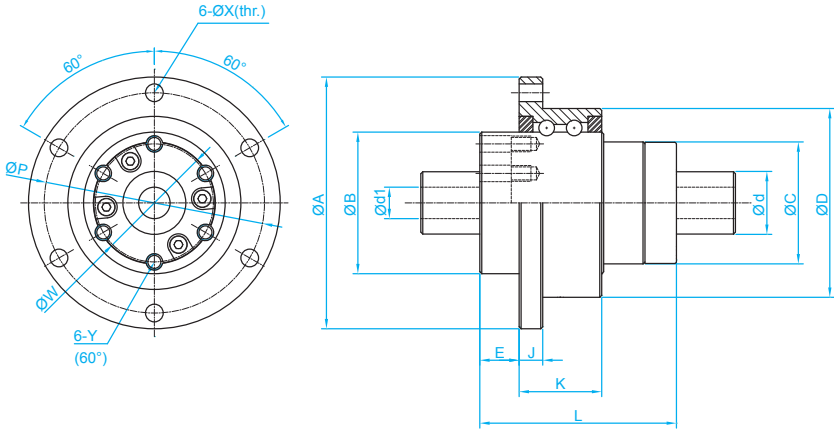

Unit : mm

Model No.	d	d1	Row	Support Bearing Load Rating		Spline Nut Dimension													Ball Spline Load Rating	
				Ca (kgf)	Coa (kgf)	D	A	B	L	C	E	J	K	P	X	W	Y		Ca (kgf)	Coa (kgf)
RLSF016	16	8	2	730	1484	$48^{-0.009}_{-0.025}$	64	$36^{0}_{-0.025}$	50	31	10	6	21	56	4.5	30	M4		545	849
RLSF020	20	10	2	788	1811	$56^{-0.01}_{-0.029}$	72	$43.5^{0}_{-0.025}$	63	35	12	6	21	64	4.5	36	M5		736	1124
RLSF025	25	15	4	1094	2607	$66^{-0.01}_{-0.029}$	86	$52^{0}_{-0.03}$	71	42	13	7	25	75	5.5	44	M5		1003	1593
RLSF032	32	16	4	1191	3233	$78^{-0.01}_{-0.029}$	103	$63^{0}_{-0.03}$	80	52	17	8	25	89	6.6	54	M6		1324	2251
RLSF040	40	20	4	2216	6685	$100^{-0.012}_{-0.034}$	130	$79.5^{0}_{-0.035}$	100	64	20	10	33	113	9	68	M6		2972	4033

1-5 Nominal Model Code of Rotary Series

RSSY series specifications

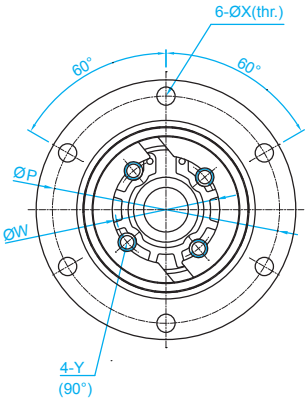

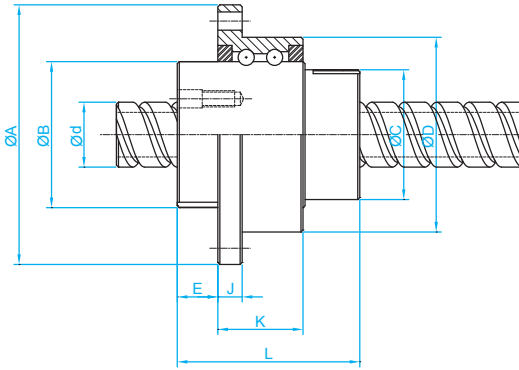

RFSY

Unit : mm

Model No.	d	l	Da	n	Support Bearing Load Rating		Ball Screw Nut Dimension												Screw Nut Load Rating	
					Ca (kgf)	Coa (kgf)	D	A	B	L	C	E	J	K	P	X	W	Y	Ca (kgf)	Coa (kgf)
RSSY01616-1.8	16	16	2.778	1.8x1	730	1484	$48^{-0.009}_{-0.025}$	64	$36^{0}_{-0.025}$	45	32	10	6	21	56	4.5	25	M4	591	1275
RSSY02020-1.8	20	20	3.175	1.8x1	788	1811	$56^{0.01}_{-0.029}$	72	$43.5^{0}_{-0.025}$	52	39	11	6	21	64	4.5	31	M5	764	1758
RSSY02525-1.8	25	25	3.969	1.8x1	1094	2607	$66^{0.01}_{-0.029}$	86	$52^{0}_{-0.03}$	64	47	13	7	25	75	5.5	38	M6	1142	2747
RSSY03232-1.8◆	32	32	4.762	1.8x1	1191	3233	$78^{0.01}_{-0.029}$	103	$63^{0}_{-0.03}$	78	58	14	8	25	89	6.6	48	M6	1664	4345
RSSY04040-1.8◆	40	40	6.35	1.8x1	2216	6685	$110^{0.012}_{-0.034}$	130	$79.5^{0}_{-0.035}$	99	73	16.5	10	33	113	9	61	M8	2662	7031

※Items labeled with ◆ are customized products. For these product orders, please contact TBI in advance.

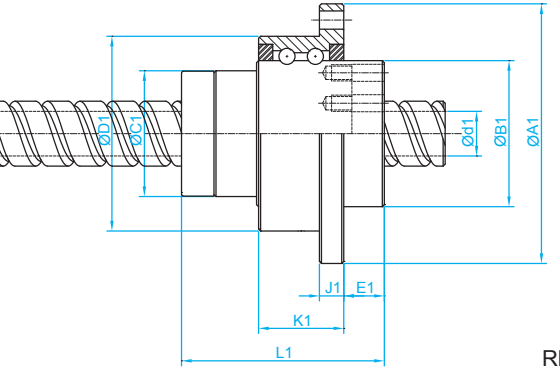

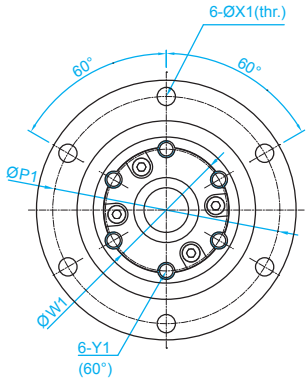

RLSF

Unit : mm

Model No.	d	d1	Row	Support Bearing Load Rating		Spline Nut Dimension												Ball Spline Load Rating	
				Ca (kgf)	Coa (kgf)	D1	A1	B1	L1	C1	E1	J1	K1	P1	X1	W1	Y1	Ca (kgf)	Coa (kgf)
RSSY01616	16	11	2	730	1484	$48^{-0.009}_{-0.025}$	64	$36^{0}_{-0.025}$	50	31	10	6	21	56	4.5	30	M4	545	849
RSSY02020	20	14	2	788	1811	$56^{-0.01}_{-0.029}$	72	$43.5^{0}_{-0.025}$	63	35	12	6	21	64	4.5	36	M5	736	1124
RSSY02525	25	18	4	1094	2607	$66^{-0.01}_{-0.029}$	86	$52^{0}_{-0.03}$	71	42	13	7	25	75	5.5	44	M5	1003	1593
RSSY03232	32	23	4	1191	3233	$78^{-0.01}_{-0.029}$	103	$63^{0}_{-0.03}$	80	52	17	8	25	89	6.6	54	M6	1324	2251
RSSY04040	40	29	4	2216	6685	$100^{-0.012}_{-0.034}$	130	$79.5^{0}_{-0.035}$	100	64	20	10	33	113	9	68	M6	2972	4033

1-5 Nominal Model Code of Rotary Series

RSLY Series Specifications

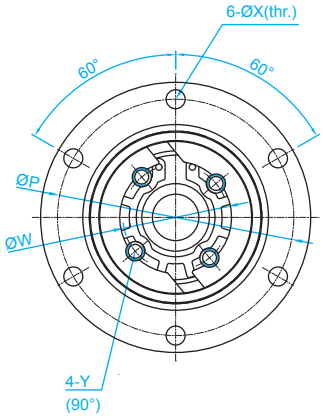

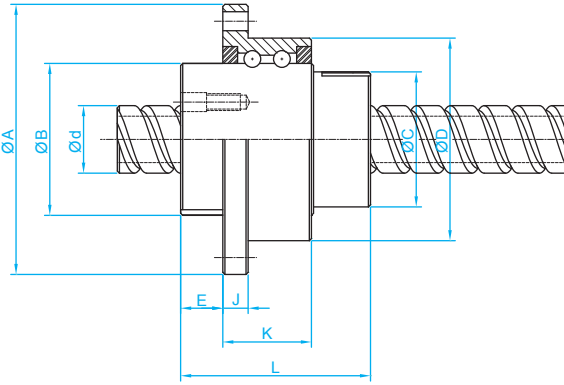

Unit : mm

Model No.	d	l	Da	n	Support Bearing Load Rating		Ball Screw Nut Dimension												Screw Nut Load Rating	
					Ca (kgf)	Coa (kgf)	D	A	B	L	C	E	J	K	P	X	W	Y	Ca (kgf)	Coa (kgf)
RSLY01616-1.8	16	16	2.778	1.8x1	730	1484	$48^{-0.009}_{-0.025}$	64	$36^{0}_{-0.025}$	45	32	10	6	21	56	4.5	25	M4	591	1275
RSLY02020-1.8	20	20	3.175	1.8x1	788	1811	$56^{-0.01}_{-0.029}$	72	$43.5^{0}_{-0.025}$	52	39	11	6	21	64	4.5	31	M5	764	1758
RSLY02525-1.8	25	25	3.969	1.8x1	1094	2607	$66^{-0.01}_{-0.029}$	86	$52^{0}_{-0.03}$	64	47	13	7	25	75	5.5	38	M6	1142	2747
RSLY03232-1.8◆	32	32	4.762	1.8x1	1191	3233	$78^{-0.01}_{-0.029}$	103	$63^{0}_{-0.03}$	78	58	14	8	25	89	6.6	48	M6	1664	4345
RSLY04040-1.8◆	40	40	6.35	1.8x1	2216	6685	$100^{-0.012}_{-0.034}$	130	$79.5^{0}_{-0.035}$	99	73	16.5	10	33	113	9	61	M8	2662	7031

※Items labeled with ◆ are customized products. For these product orders, please contact TBI in advance.

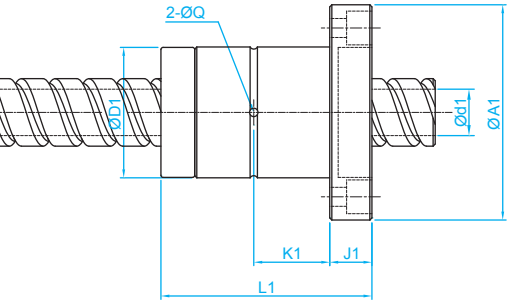

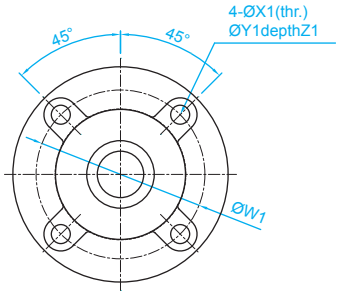

Unit : mm

Model No.	d	d1	Row	Spline Nut Dimension										Ball Spline Load Rating	
				D1	A1	L1	J1	K1	W1	X1	Y1	Z1	Q	Ca (kgf)	Coa (kgf)
RSLY01616	16	11	2	$31^{0}_{-0.016}$	51	50	10	18	40	4.5	8	6	2	545	849
RSLY02020	20	14	2	$35^{0}_{-0.016}$	58	56	10	18	45	5.5	9.5	5.4	2	724	1109
RSLY02525	25	18	4	$42^{0}_{-0.016}$	65	71	13	26.5	52	5.5	9.5	8	3	1003	1593
RSLY03232	32	23	4	$49^{0}_{-0.016}$	77	80	13	30	62	6.6	11	6.5	3	1324	2251
RSLY04040	40	29	4	$64^{0}_{-0.019}$	100	100	18	36	82	9	14	12	4	2972	4033

1-6 Roary Series Weight List

Mass series

Model No.	Weight			
	Ball Nut (kg)	Spline Nut (Kg)	Screw Shaft (kg/m)	Spline Shaft (kg/m)
RFBY				
RFBY01616-1.8	0.502	-	1.56	-
RFBY01616-3.6	0.462	-	1.55	-
RFBY02020-1.8	0.822	-	2.45	-
RFBY02020-3.6	0.538	-	2.42	-
RFBY02525-1.8	1.264	-	3.82	-
RFBY02525-3.6	1.274	-	3.79	-
RFBY03232-1.8	1.543	-	6.27	-
RFBY04040-1.8	4.648	-	9.78	-
RFBY05050-1.8	6.096	-	15.28	-
RLBF				
RLBF016	-	0.52	-	1.56
RLBF020	-	0.75	-	2.44
RLBF025	-	0.964	-	3.80
RLBF032	-	2.002	-	6.255
RLBF040	-	3.616	-	9.69
RLBF050	-	6.43	-	15.19
RBBY				
RBBY01616-1.8	0.502	0.52	1.54	-
RBBY02020-1.8	0.822	0.75	2.42	-
RBBY02525-1.8	1.264	0.964	3.77	-
RBBY03232-1.8	1.543	2.002	6.21	-
RBBY04040-1.8	4.648	3.616	9.61	-
RBBY05050-1.8	6.096	6.43	15.06	-
RBLY				
RBLY01616-1.8	0.502	0.226	1.54	-
RBLY02020-1.8	0.822	0.303	2.42	-
RBLY02525-1.8	1.264	0.458	3.77	-
RBLY03232-1.8	1.543	0.713	6.21	-
RBLY04040-1.8	4.648	1.430	9.61	-
RBLY05050-1.8	6.096	2.756	15.06	-

Compact series

Model No.	Weight			
	Ball Nut (kg)	Spline Nut (Kg)	Screw Shaft (kg/m)	Spline Shaft (kg/m)
RFSY				
RFSY01616-1.8	0.324	-	1.56	-
RFSY01616-3.6	0.372	-	1.55	-
RFSY02020-1.8	0.536	-	2.45	-
RFSY02020-3.6	0.534	-	2.42	-
RFSY02525-1.8	0.9	-	3.82	-
RFSY02525-3.6	0.906	-	3.79	-
RFSY03232-1.8	1.085	-	6.27	-
RFSY04040-1.8	2.214	-	9.78	-
RLSF				
RLSF016	-	0.37	-	1.56
RLSF020	-	0.552	-	2.44
RLSF025	-	0.650	-	3.80
RLSF032	-	0.629	-	6.255
RLSF040	-	1.999	-	9.69
RSSY				
RSSY01616-1.8	0.324	0.37	1.54	-
RSSY02020-1.8	0.536	0.552	2.42	-
RSSY02525-1.8	0.9	0.650	3.77	-
RSSY03232-1.8	1.085	0.629	6.21	-
RSSY04040-1.8	2.214	1.999	9.61	-
RSLY				
RSLY01616-1.8	0.324	0.37	1.54	-
RSLY02020-1.8	0.536	0.552	2.42	-
RSLY02525-1.8	0.9	0.650	3.77	-
RSLY03232-1.8	1.085	0.629	6.21	-
RSLY04040-1.8	2.214	1.999	9.61	-